TIRE TOTTER V2.1

(2HOLE)

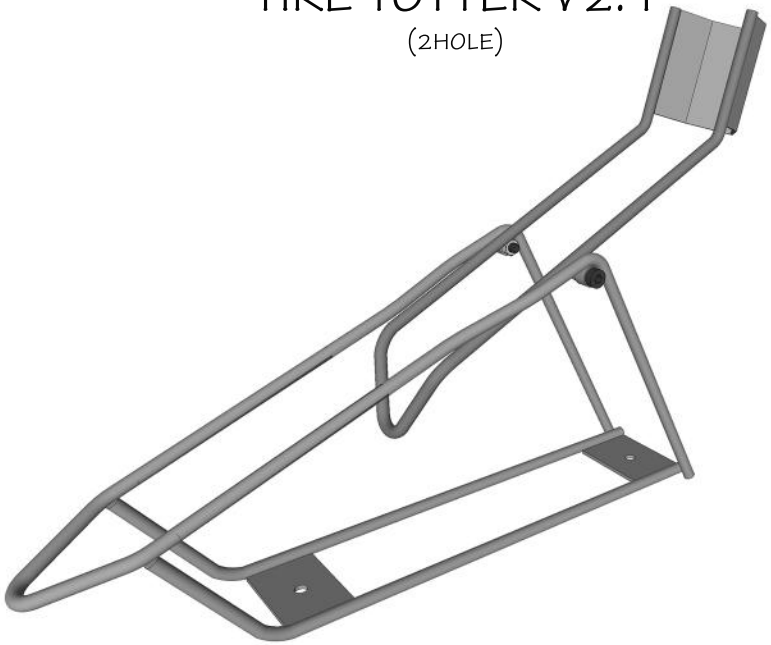

1. Tire Totter 2.1
   Base 2 Hole

2. Tire Totter
   2.1 Cradle

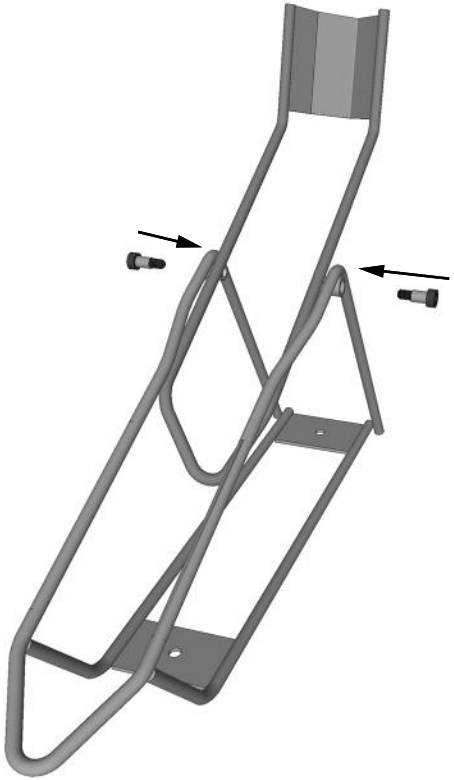

HARDWARE

3/8" SHOULDER BOLT 5/16-18x1/2"
1/4'' x 1 1/4'' LAG BOLT
1/4'' WASHER

Before rack Assembly, Locate hardware and
Unpack and identify all parts

ASSEMBLY

USE 2- 3/8" SHOULDER BOLT 5/16-18x1/2"
TO ATTACH THE TIRE TOTTER CRADLE TO THE TIRE TOTTER BASE, AS SHOWN.
MOUNT USING THE PROVIDED 1/4'' x 1 1/4'' LAG BOLTS AND 1/4'' WASHERS.